ÓÉ Foxit PDF Editor ±à¼-
ºæÈ¨ËùÓÐ (c) by Foxit Software Company, 2004
½öÓÃÓÚÆÀ¹À¡£

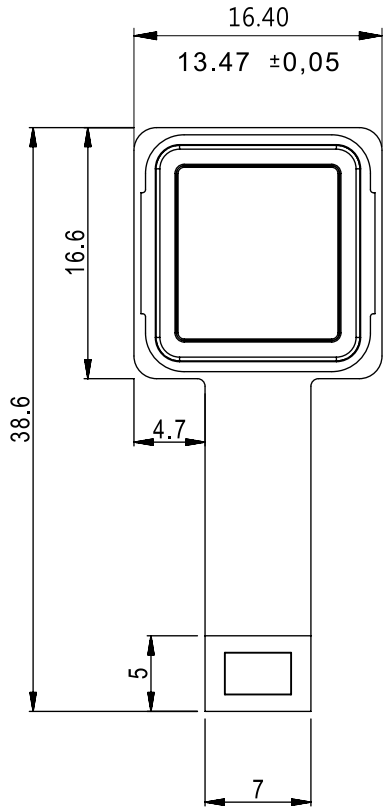

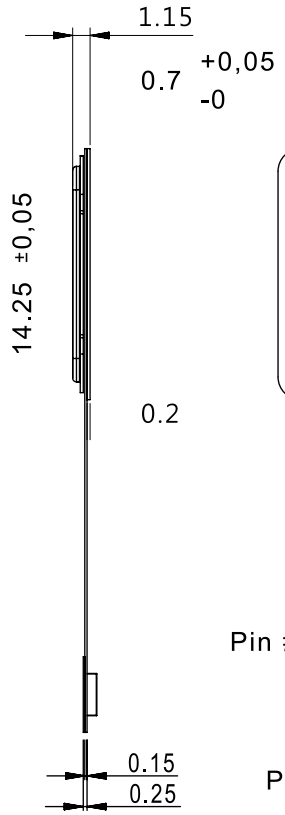

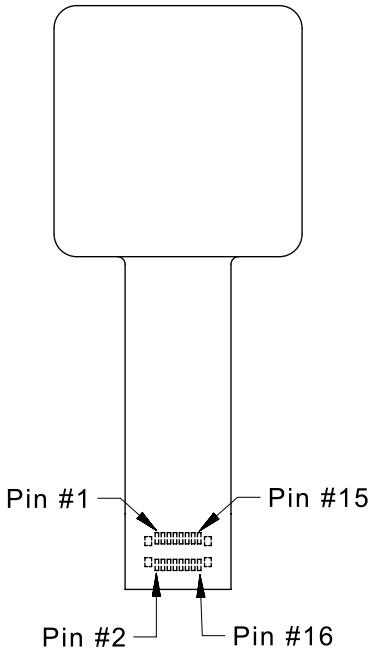

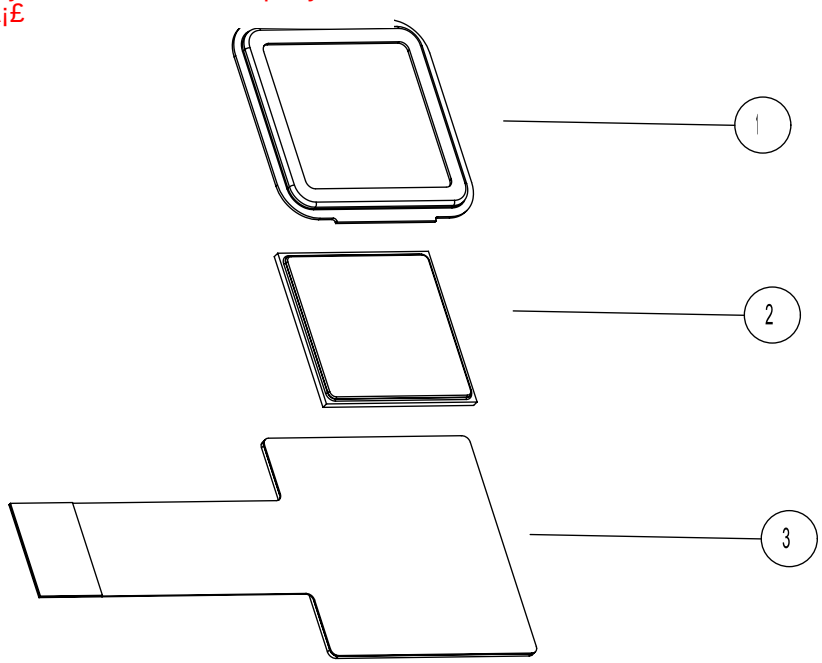

< SCALE 1:1 >

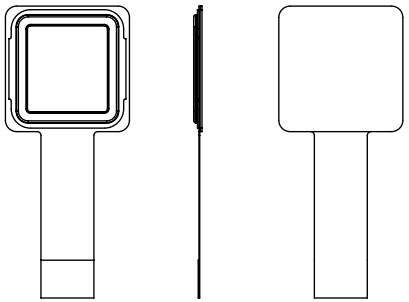

CONFIDENTIAL

Tolerance +/-0,1		Prepared (Also Subject Responsible If Other) Ola Nyström	
FINGERPRINTS		Doc Responsible/Approved Mats Slottner	Date 2014-04-17 / Rev C
		Product Name FPC1020AM - TOUCH FINGERPRINT SENSOR MODULE	
Reference		Document No. 320 - FPC1020AM_0B	Sheet 1 (2)
Scale 2:1	Units mm	Size A4l	

YY

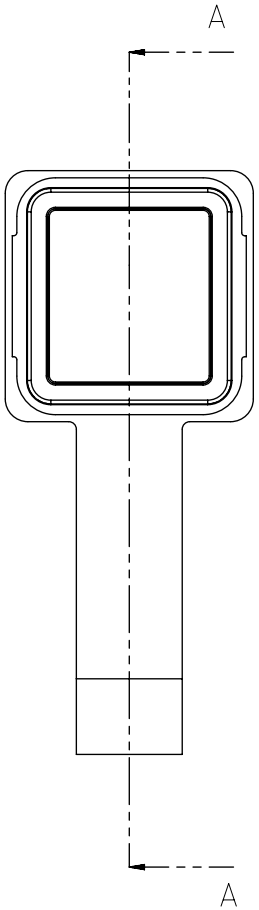

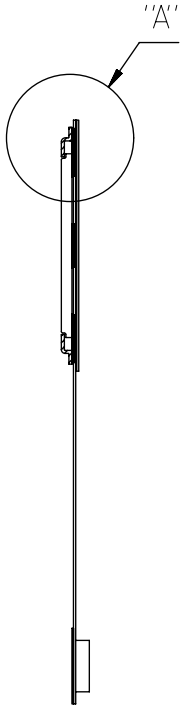

SECTION A-A

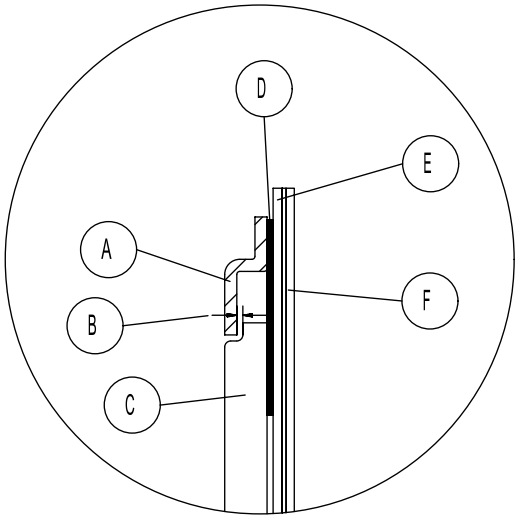

Detail "A"

	PART NAME	THICKNESS
A	BEZEL (SUS)	0.2t
B	BEZEL - LGA GAP	0.1t
C	LGA PACKAGE	0.4t
D	SOLDER	0.1t
E	FPCB	0.15t
F	STIFFENER(SUS) INCL. 0.05mm CONDUCTIVE ADHESIVE TOWARDS FPCB	0.2t
	TOTAL THICKNESS	1.15t

CONFIDENTIAL

Tolerance N/A		Prepared (Also Subject Responsible If Other) Ola Nyström	
FINGERPRINTS		Doc Responsible/Approved Mats Slottner	Date 2014-04-17 / Rev C
		Product Name FPC1020AM - TOUCH FINGERPRINT SENSOR MODULE	
Reference		Document No. 320 - FPC1020AM_0B	Sheet 2 (2)
Scale 2:1	Units mm	Size A4l	